DATA SHEET

Three Phase Induction Motor - Squirrel Cage

Customer	:

Product line	: Rolled Steel NEMA Premium Efficiency Three-Phase	Product code :	13180741
		Catalog # :	HT015502NPW01

Frame	: 254/6T	Locked rotor time	: 25s (cold) 14s (hot)
Output	: 15 HP (11 kW)	Temperature rise	: 80 K
Poles	: 2	Duty cycle	: Cont.(S1)
Frequency	: 60 Hz	Ambient temperature	: -20°C to +40°C
Rated voltage	: 575 V	Altitude	: 1000 m.a.s.l.
Rated current	: 13.9 A	Protection degree	: IP55
L. R. Amperes	: 94.7 A	Cooling method	: IC411 - TEFC
LRC	: 6.8x(Code G)	Mounting	: F-1
No load current	: 5.20 A	Rotation¹	: Both (CW and CCW)
Rated speed	: 3525 rpm	Noise level²	: 75.0 dB(A)
Slip	: 2.08 %	Starting method	: Direct On Line
Rated torque	: 3.09 kgfm	Approx. weight³	: 80.9 kg
Locked rotor torque	: 200 %		
Breakdown torque	: 300 %		
Insulation class	: F		
Service factor	: 1.15		
Moment of inertia (J)	: 0.0367 kgm²		
Design	: B		

Output	25%	50%	75%	100%
Efficiency (%)	89.2	89.5	91.0	91.0
Power Factor	0.47	0.73	0.83	0.87

Foundation loads	
Max. traction	: 105 kgf
Max. compression	: 186 kgf

		Drive end	Non drive end
Bearing type	:	6309 Z C3	6208 Z C3
Sealing	:	V'Ring	V'Ring
Lubrication interval	:	15797 h	20000 h
Lubricant amount	:	13 g	8 g
Lubricant type	:	Mobil Polyrex EM	

Notes

This revision replaces and cancel the previous one, which must be eliminated.
(1) Looking the motor from the shaft end.
(2) Measured at 1m and with tolerance of +3dB(A).
(3) Approximate weight subject to changes after manufacturing process.
(4) At 100% of full load.

These are average values based on tests with sinusoidal power supply, subject to the tolerances stipulated in NEMA MG-1.

Rev.	Changes Summary	Performed	Checked	Date

Performed by				
Checked by			Page	Revision
Date	13/11/2020		1 / 6	

This document is exclusive property of WEG S/A. Reprinting is not allowed without written authorization of WEG S/A.
Subject to change without notice

TORQUE AND CURRENT VS SPEED CURVE

Three Phase Induction Motor - Squirrel Cage

Customer	:		
Product line	: Rolled Steel NEMA Premium Efficiency Three-Phase	Product code :	13180741
		Catalog # :	HT015502NPW01

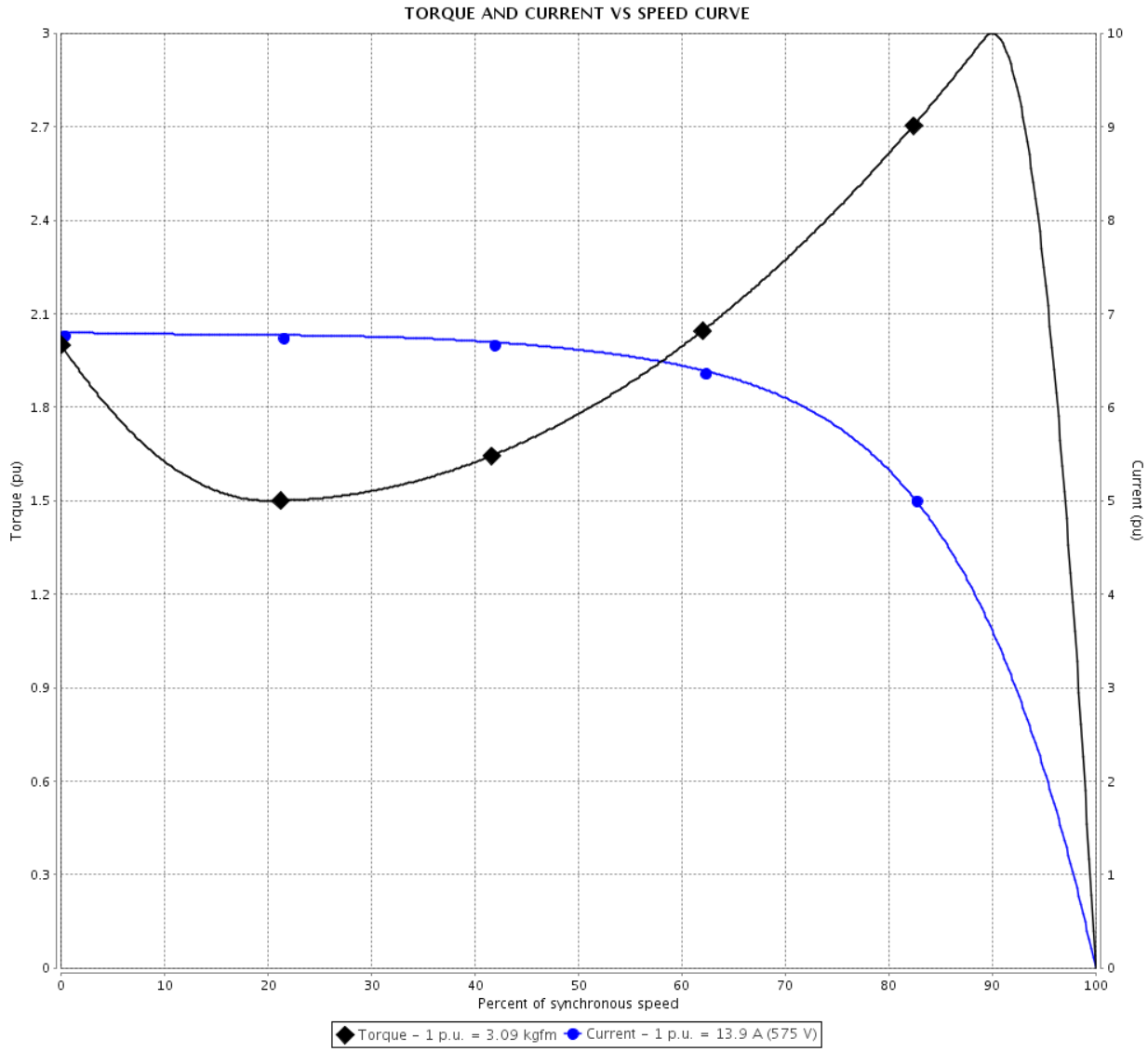

Performance	: 575 V 60 Hz 2P		
Rated current	: 13.9 A	Moment of inertia (J)	: 0.0367 kgm²
LRC	: 6.8	Duty cycle	: Cont.(S1)
Rated torque	: 3.09 kgfm	Insulation class	: F
Locked rotor torque	: 200 %	Service factor	: 1.15
Breakdown torque	: 300 %	Temperature rise	: 80 K
Rated speed	: 3525 rpm	Design	: B
Locked rotor time	: 25s (cold) 14s (hot)		

Rev.	Changes Summary	Performed	Checked	Date

Performed by				
Checked by			Page	Revision
Date	13/11/2020		2 / 6	

This document is exclusive property of WEG S/A. Reprinting is not allowed without written authorization of WEG S/A.
Subject to change without notice

LOAD PERFORMANCE CURVE

Three Phase Induction Motor - Squirrel Cage

Customer	:		
Product line	: Rolled Steel NEMA Premium Efficiency Three-Phase	Product code :	13180741
		Catalog # :	HT015502NPW01

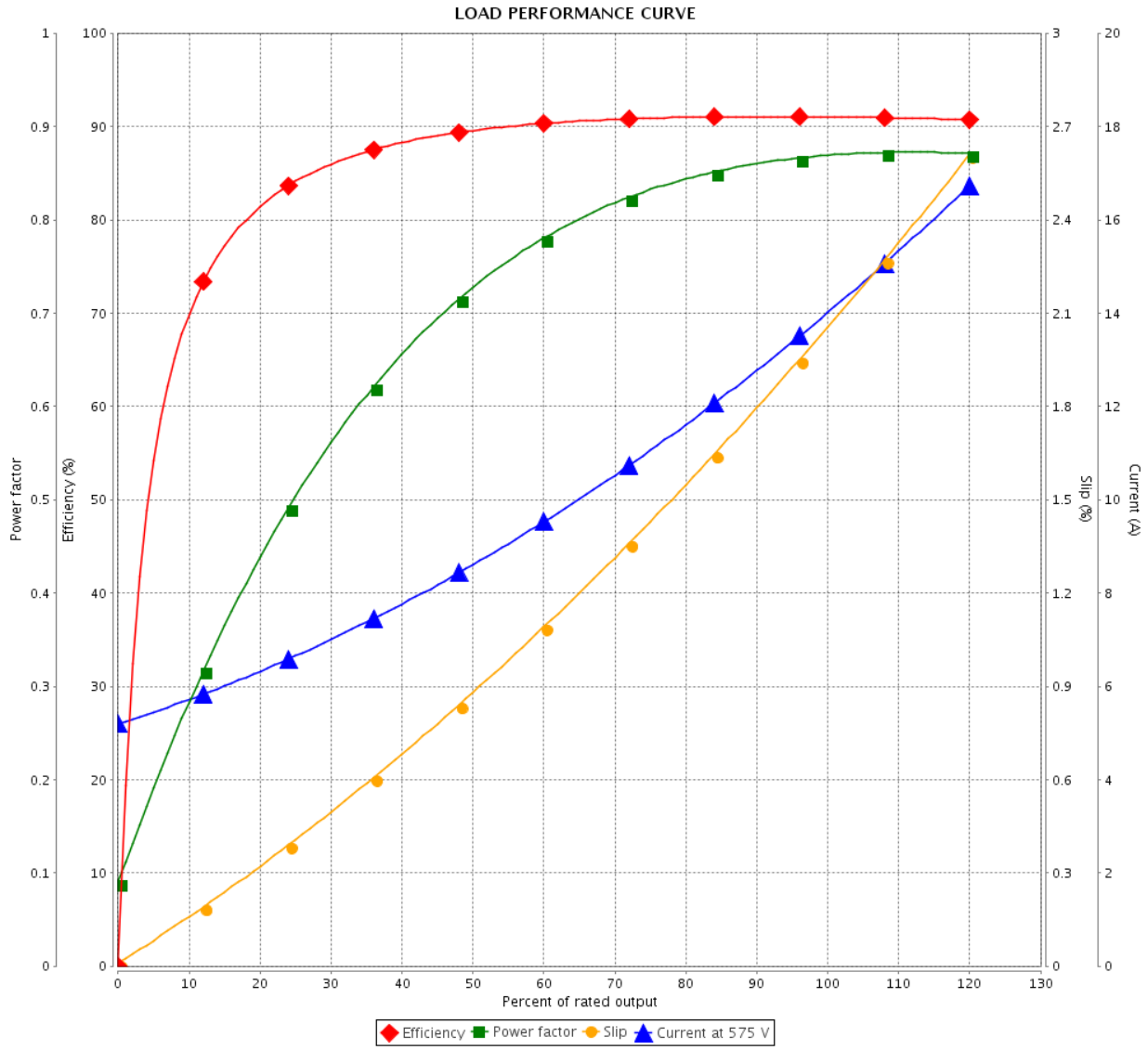

Performance	: 575 V 60 Hz 2P		
Rated current	: 13.9 A	Moment of inertia (J)	: 0.0367 kgm²
LRC	: 6.8	Duty cycle	: Cont.(S1)
Rated torque	: 3.09 kgfm	Insulation class	: F
Locked rotor torque	: 200 %	Service factor	: 1.15
Breakdown torque	: 300 %	Temperature rise	: 80 K
Rated speed	: 3525 rpm	Design	: B

Rev.	Changes Summary	Performed	Checked	Date

Performed by				
Checked by			Page	Revision
Date	13/11/2020		3 / 6	

This document is exclusive property of WEG S/A. Reprinting is not allowed without written authorization of WEG S/A.
Subject to change without notice

THERMAL LIMIT CURVE

Three Phase Induction Motor - Squirrel Cage

Customer	:		
Product line	: Rolled Steel NEMA Premium Efficiency Three-Phase	Product code :	13180741
		Catalog # :	HT015502NPW01

Performance	: 575 V 60 Hz 2P		
Rated current	: 13.9 A	Moment of inertia (J)	: 0.0367 kgm²
LRC	: 6.8	Duty cycle	: Cont.(S1)
Rated torque	: 3.09 kgfm	Insulation class	: F
Locked rotor torque	: 200 %	Service factor	: 1.15
Breakdown torque	: 300 %	Temperature rise	: 80 K
Rated speed	: 3525 rpm	Design	: B
Heating constant			
Cooling constant			

Rev.	Changes Summary	Performed	Checked	Date

Performed by				
Checked by			Page	Revision
Date	13/11/2020		4 / 6	

This document is exclusive property of WEG S/A. Reprinting is not allowed without written authorization of WEG S/A.
Subject to change without notice

THERMAL LIMIT CURVE

Three Phase Induction Motor - Squirrel Cage

Customer :

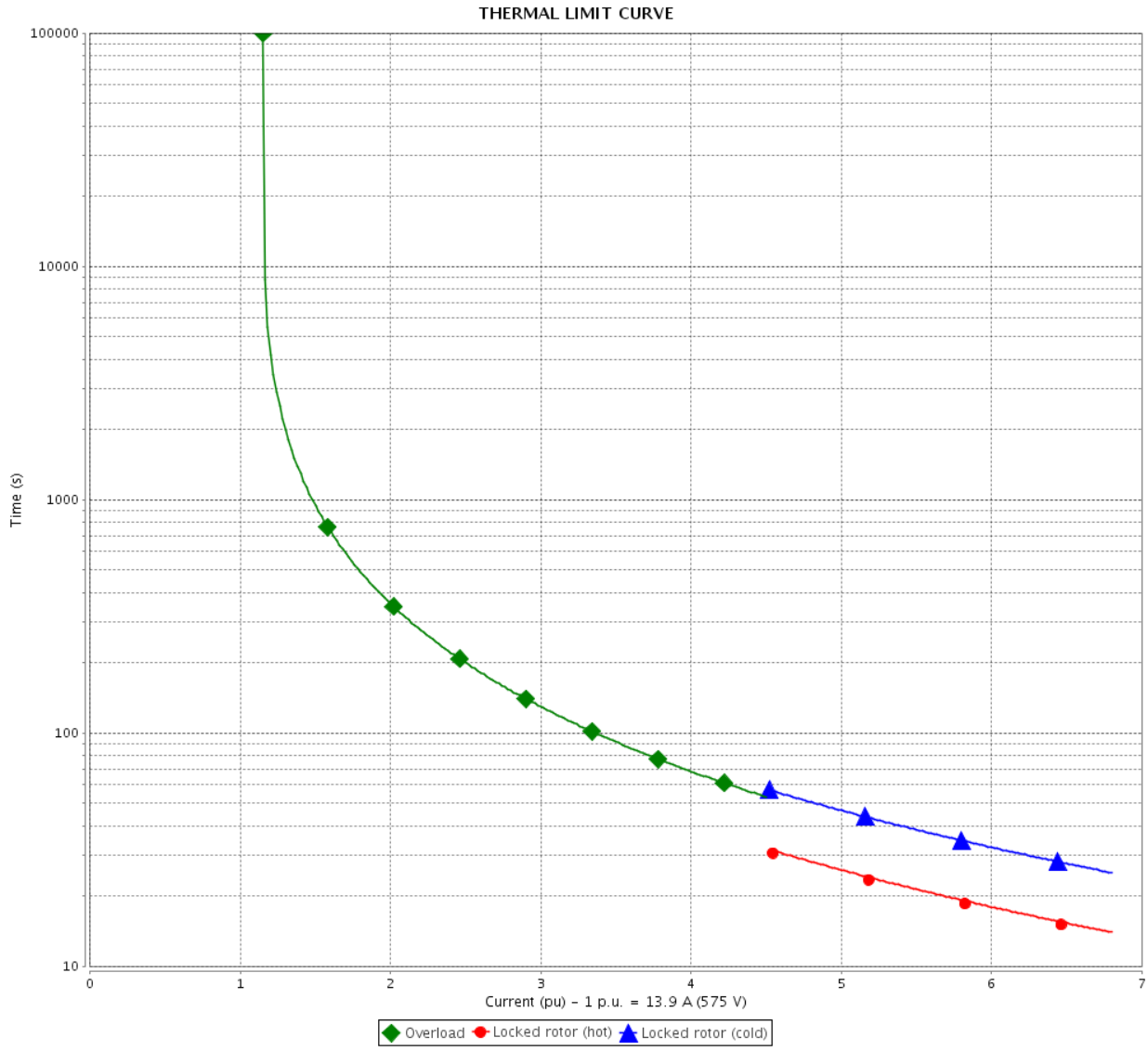

Rev.	Changes Summary	Performed	Checked	Date

Performed by				
Checked by			Page	Revision
Date	13/11/2020		5 / 6	

This document is exclusive property of WEG S/A. Reprinting is not allowed without written authorization of WEG S/A.
Subject to change without notice

VFD OPERATION CURVE

Three Phase Induction Motor - Squirrel Cage

Customer	:		
Product line	: Rolled Steel NEMA Premium Efficiency Three-Phase	Product code :	13180741
		Catalog # :	HT015502NPW01

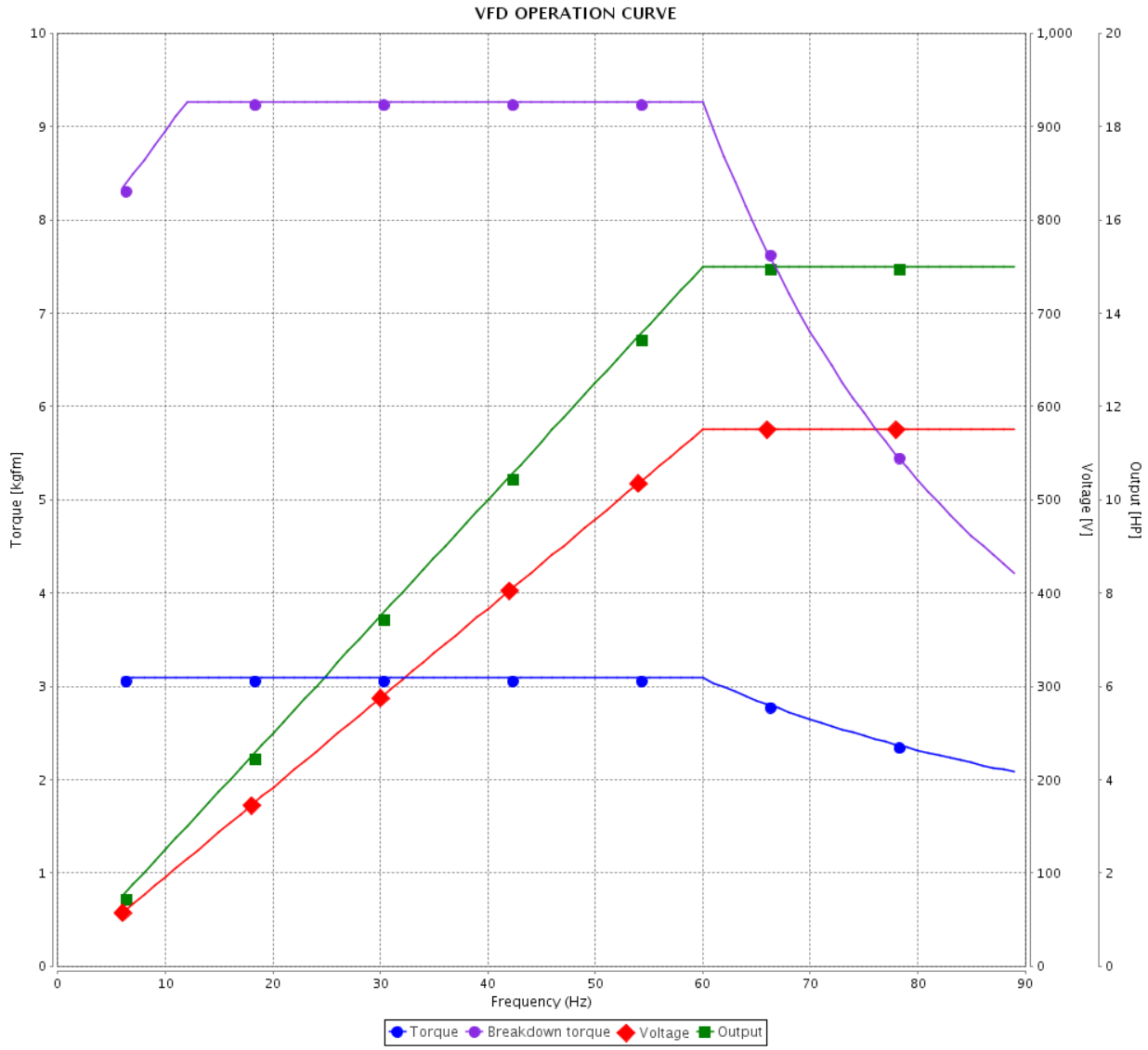

Performance	: 575 V 60 Hz 2P		
Rated current	: 13.9 A	Moment of inertia (J)	: 0.0367 kgm²
LRC	: 6.8	Duty cycle	: Cont.(S1)
Rated torque	: 3.09 kgfm	Insulation class	: F
Locked rotor torque	: 200 %	Service factor	: 1.15
Breakdown torque	: 300 %	Temperature rise	: 80 K
Rated speed	: 3525 rpm	Design	: B

Rev.	Changes Summary	Performed	Checked	Date

Performed by				
Checked by			Page	Revision
Date	13/11/2020		6 / 6	

This document is exclusive property of WEG S/A. Reprinting is not allowed without written authorization of WEG S/A.
Subject to change without notice

No reproduction of this drawing is allowed written permission of WEG Motores

EIXO	
PADRÃO	X
OPCIONAL	
ESPECIAL	

Dimensões em polegada
Dimensions in inches

THIS IS AN UPDATED REVISION, THE PREVIOUS ONE MUST BE DISREGARDED.

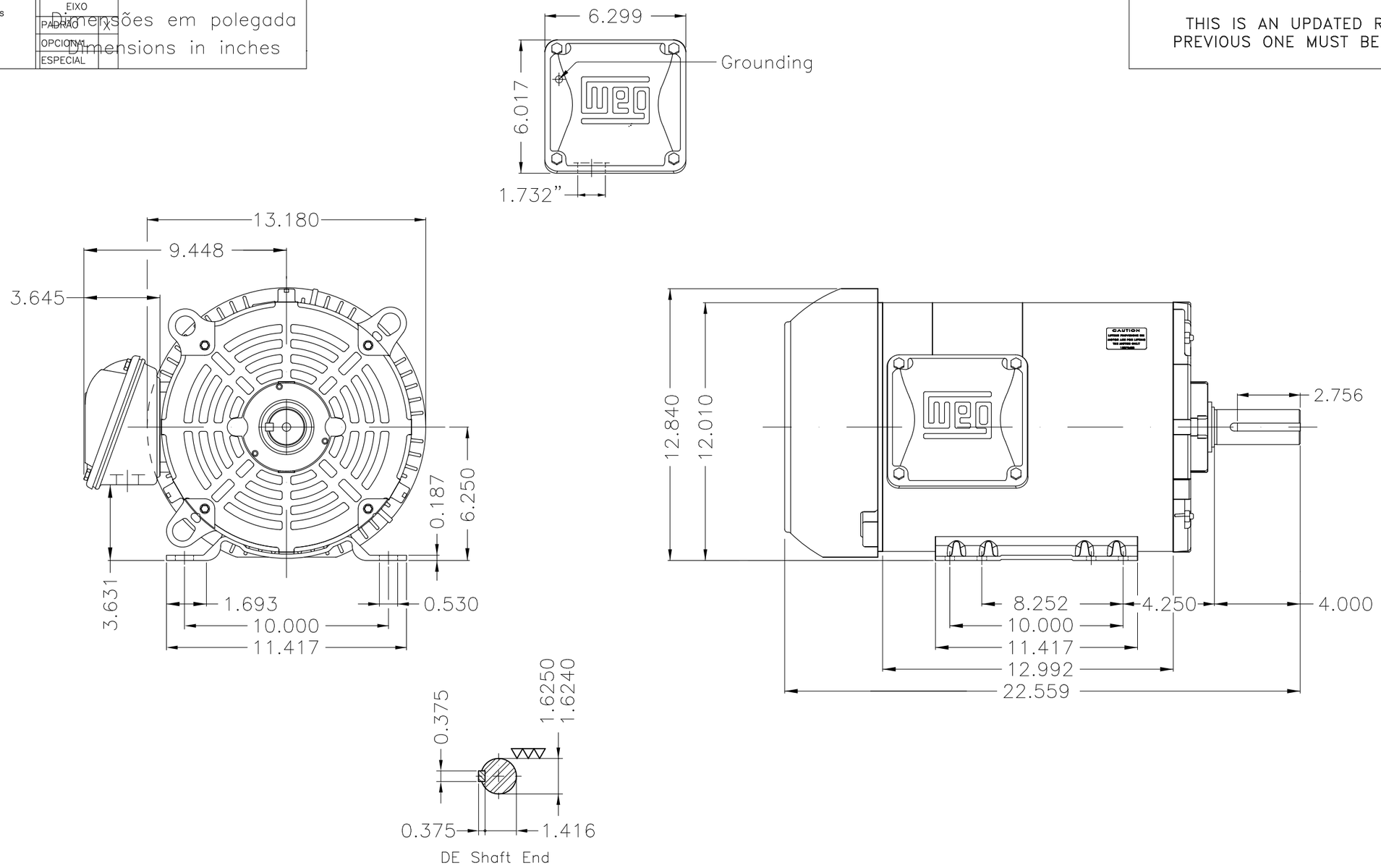

Color Munsell N 1 matte black
Painting plan 207N
Mounting F-1/B3R(D)

ECM	LOC	SUMMARY OF MODIFICATIONS	EXECUTED	CHECKED	RELEASED	DATE	VER

EXECUTED	USERADMIN	THREE P. MOTOR CLOS ROLLED STEEL NEMA PREM	
CHECKED		FRAME 254/6T IP55 TEFC	
RELEASED		WEG code: 13180741	
REL DT	13.11.2020	WMO	Jaragua do Sul	Product Engineering	SHEET 1 / 1

15 HP 02 Poles 60Hz

A

ZME A3

WEG's property. Forbidden reproduction without previous authorization.